Auxiliary Fuel Tank Level
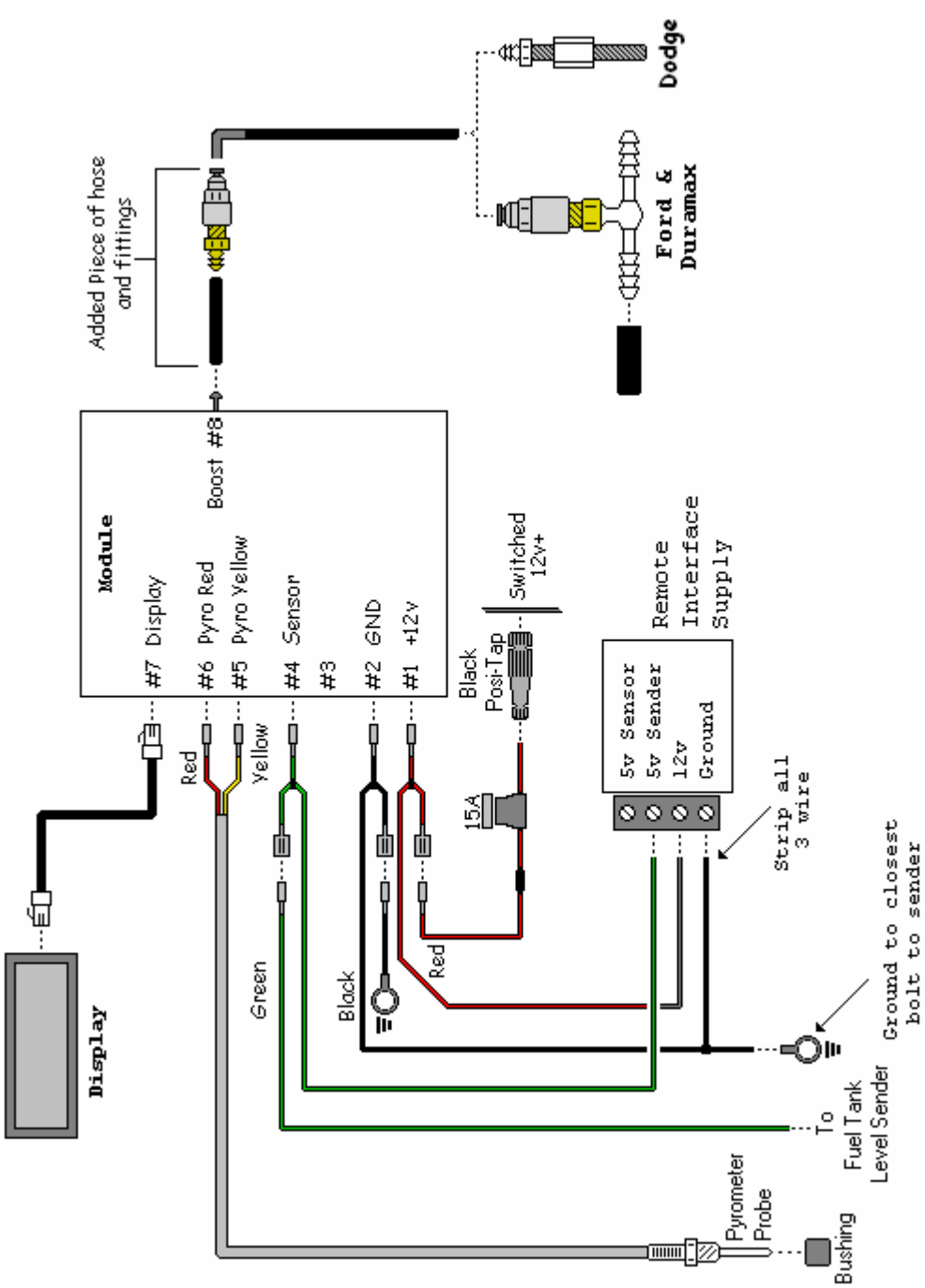
Consult this diagram for correct hook-up of the auxiliary fuel tank level sender kit. Notice that the green wire from the control module connects to the output of the auxiliary fuel tank's fuel sender. Consult the literature for the sender for the correct terminal or wire for the output.